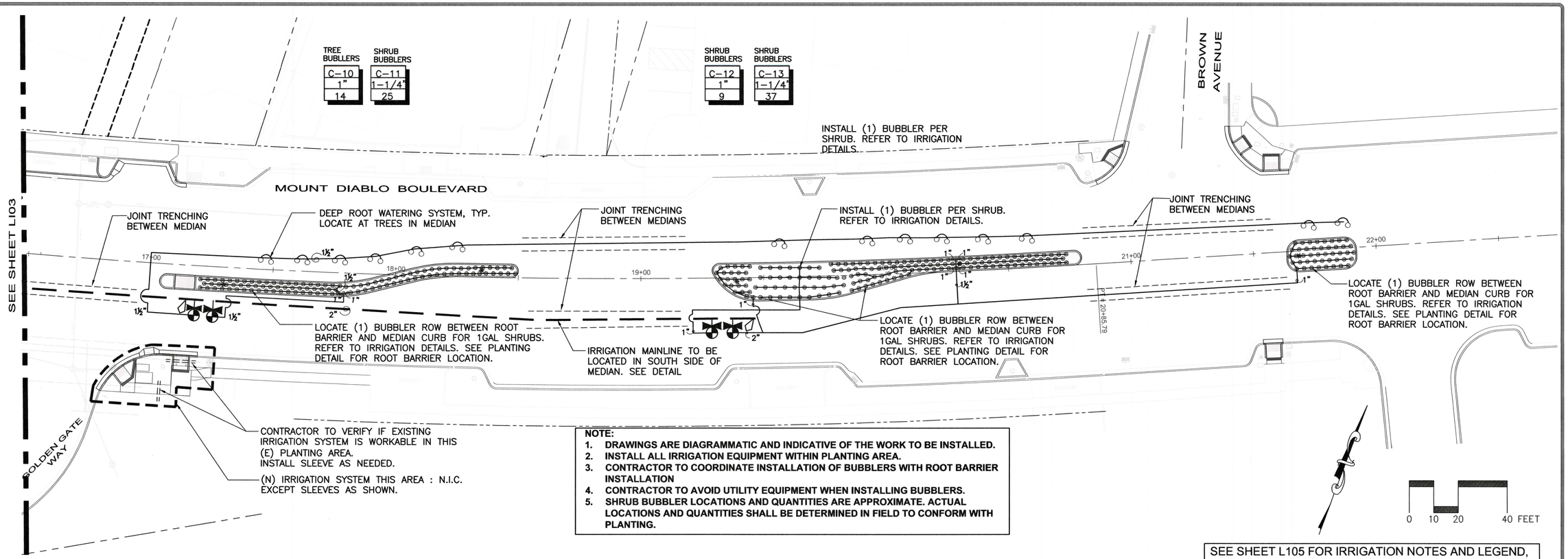

NOTE:

1. **DRAWINGS ARE DIAGRAMMATIC AND INDICATIVE OF THE WORK TO BE INSTALLED.**
2. **INSTALL ALL IRRIGATION EQUIPMENT WITHIN PLANTING AREA.**
3. **CONTRACTOR TO COORDINATE INSTALLATION OF BUBBLERS WITH ROOT BARRIER INSTALLATION**
4. **CONTRACTOR TO AVOID UTILITY EQUIPMENT WHEN INSTALLING BUBBLERS.**
5. **SHRUB BUBBLER LOCATIONS AND QUANTITIES ARE APPROXIMATE. ACTUAL LOCATIONS AND QUANTITIES SHALL BE DETERMINED IN FIELD TO CONFORM WITH PLANTING.**

SEE SHEET L105 FOR IRRIGATION NOTES AND LEGEND, AND SHEET L106 AND L107 FOR IRRIGATION DETAILS

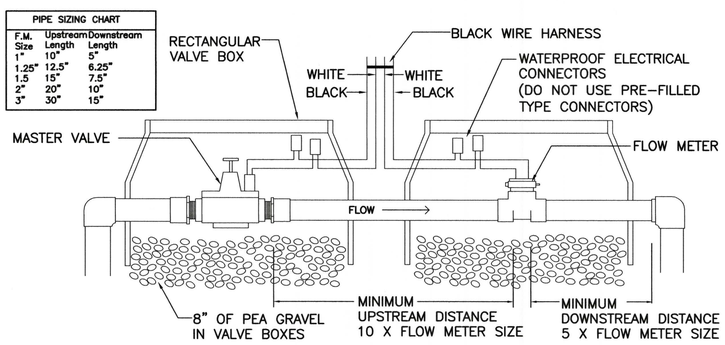

C FLOW SENSOR / MASTER VALVE
NOT TO SCALE

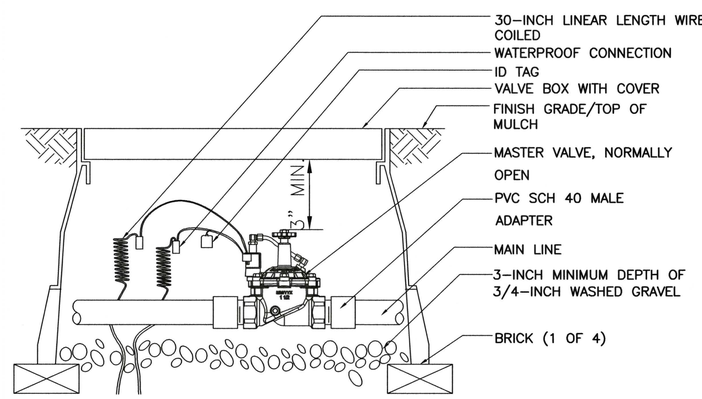

B MASTER VALVE
NOT TO SCALE

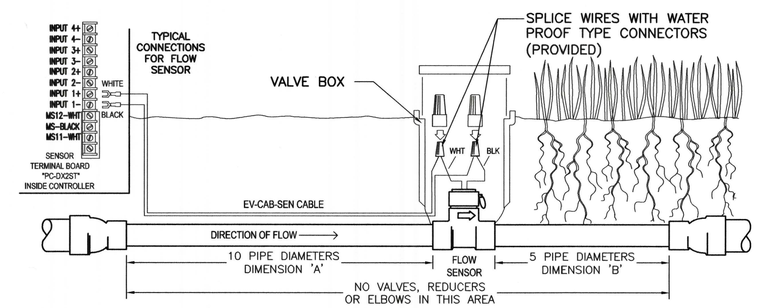

EXAMPLE: FOR 3" FLOW SENSOR, DIMENSION 'A' MINIMUM 30"
DIMENSION 'B' MINIMUM 15"

UPON COMPLETION OF THE PHYSICAL INSTALLATION OF THE FLOW SENSOR, COMPLETE THE WIRING CONNECTION FROM THE FLOW SENSOR TO EXISTING CONTROLLER, THE DV2 CONTROLLER, BY FOLLOWING THE PROCEDURE BELOW.

1. TURN THE POWER OFF AT THE CONTROLLER
2. AT THE FLOW SENSOR:
   CONNECT THE BLACK WIRE OF THE FLOW SENSOR TO THE BLACK WIRE OF THE "EV-CAB-SEN", SENSOR CABLE.
   CONNECT THE WHITE WIRE OF THE FLOW SENSOR TO THE WHITE WIRE OF THE "EV-CAB-SEN", SENSOR CABLE.
   *USE THE WEATHER PROOF CONNECTOR PROVIDED WITH THE FLOW SENSOR TO MAKE THE CONNECTION
3. AT THE CONTROLLER:
   CONNECT BLACK WIRE OF "EV-CAB-SEN" TO "INPUT 1-" OF THE SENSOR TERMINAL BOARD (PC-DX2ST)
   CONNECT WHITE WIRE OF "EV-CAB-SEN" TO "INPUT 1+" OF THE SENSOR TERMINAL BOARD (PC-DX2ST)
4. TURN POWER ON AT THE CONTROLLER.
5. SET THE RAIN MASTER "K" AND "OFFSET" VALUES FOR FLOW SENSOR AT THE CONTROLLER BASED ON THE TYPE AND SIZE OF FLOW SENSOR INSTALLED.

A FLOW SENSOR INSTALLATION
NOT TO SCALE

NO.	DATE	BY	REVISIONS

SCALE	1" = 20'
DATE	September 3, 2013
DRAWN BY	HS
CHECKED BY	LG

GOLDEN associates
OAKLAND CALIFORNIA #2431
LANDSCAPE ARCHITECTURE
URBAN DESIGN & PLANNING

LICENSED LANDSCAPE ARCHITECT
LESLIE B GOLDBERG
No. 2431
12/31/14
9/3/13
STATE OF CALIFORNIA

IRRIGATION PLAN
CITY OF LAFAYETTE
PROJECT No. 014-9696
MOUNT DIABLO BLVD / FIRST STREET TO BROWN AVENUE
EAST END PED/BIKE AND STREETSCAPE IMPROVEMENTS PROJECT
LAFAYETTE STA: 16+55 TO 22+00 CALIFORNIA

REVIEWED BY:
CITY OF LAFAYETTE
LAFAYETTE
TONY COE DATE
ENGINEERING SERVICES MANAGER

SHEET LI04
PROJ. NO. 014-9696